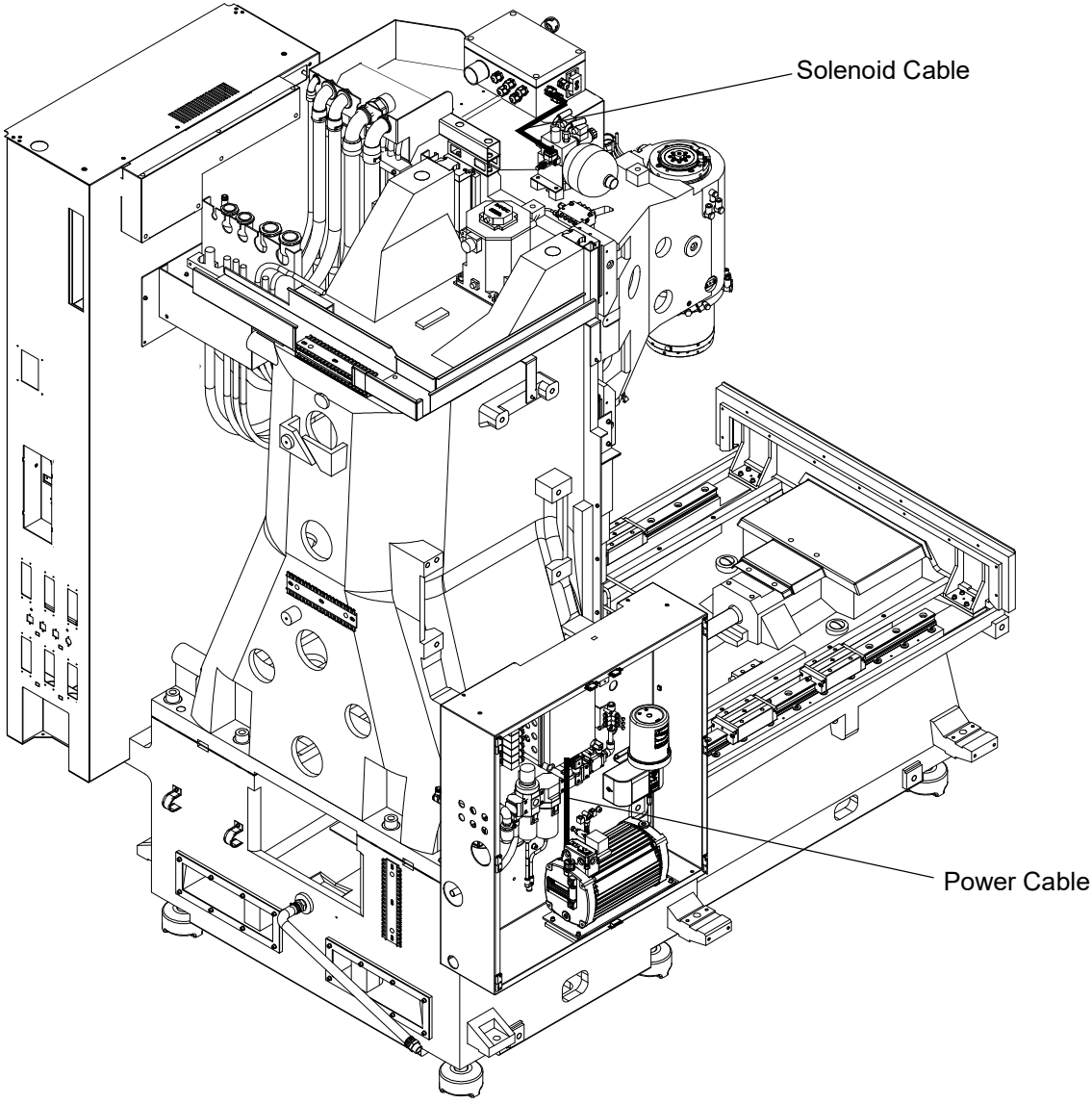Wiring Route